VCO

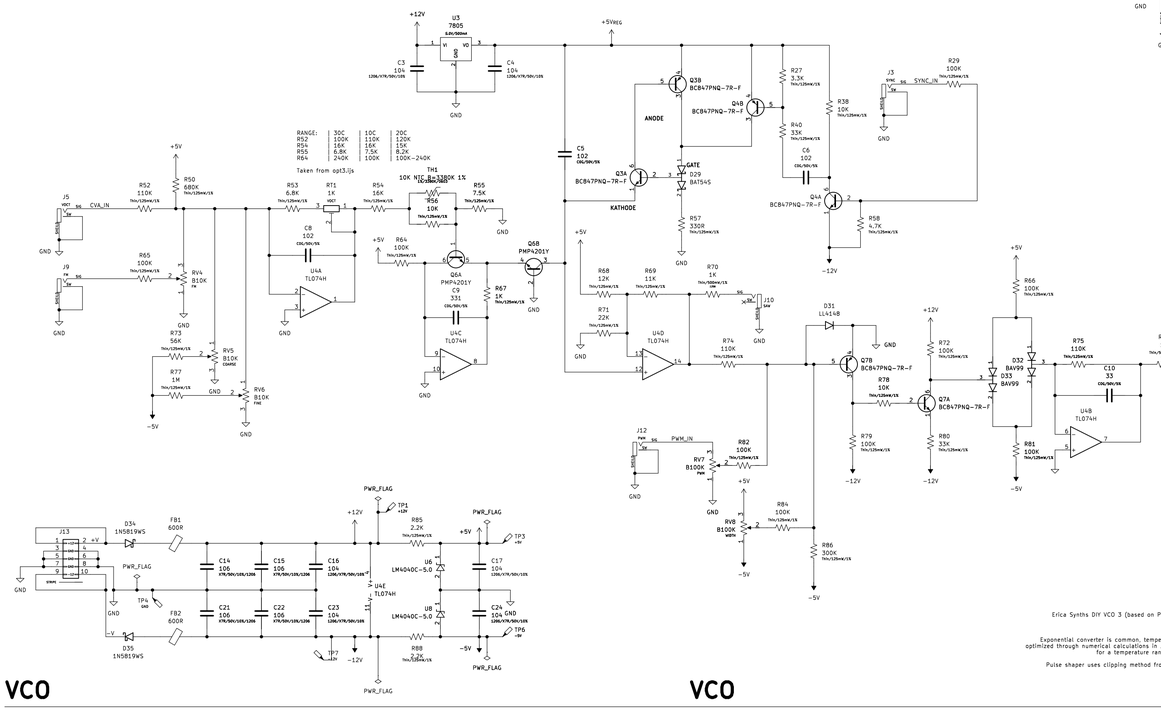

Formata Polivoks
Erica Synths DIY VCO 3 (based on Polivoks, added sync)
Korg PS3100
TB-303

Exponential converter is common, temperature compensation optimized through numerical calculations in J, and are optimized for a temperature range of 20°C to 30°C.

Pulse shaper uses clipping method from Medkeff & Parent

VCA

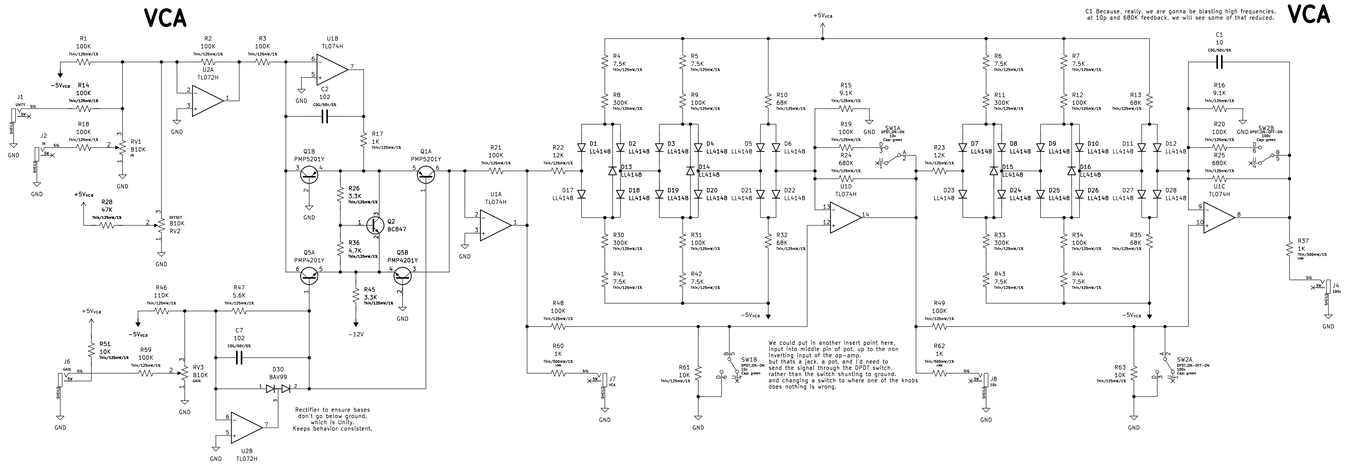

Built from experiments with diode bridges. [1] provides circuits for various nonlinear voltage transfer functions. Earlier versions of this circuit used a crossover limiter (called "insert zone unit" in [1]) as the initial stage. This was replaced with a second "step limiter".

A "step limiter" will produce deadzone in the voltage transfer function, offset on either of 0v. A single step limiter will produce 2 deadzones. The offset of these deadzones is set by the resistors to the + and − voltage references, as well as the input and output impedance of the limiter.

Series application of step limiters yields a quasi-discrete output: with increasing input voltage, the output will increase-stall-increase for each cell. Ending the series with a limiter adds an additional "stall".

For this module, the full transfer from −5V to 5V creates 5 discrete steps per stage. Subtracting the original signal from the end of each stage, with correct gain, produces a sinusoid response. Using higher valued resistors to set step thresholds exploits the exponential behavior of silicon diodes to create a smoother sinusoid response.

Values were determined through iterative ngspice optimization. As there is no buffer between cells, the change in impedance between cells forces the second step cell to last for 2 diode drops, rather than the initial 1 diode drop of the first cell. Any change to resistors in one cell can affect behavior in other cells. This makes circuit synthesis a little difficult.

An alternative implementation uses a crossover cell instead of a step cell at the start. This configuration can produce a response more like a "Saturating" Waveforder (e.g. Jurgen Haibee's design [2]). Adjustment of the center deadzone would yield ripples pm the upper and lower ends of the transfer function, but leave the center untouched. In fact, this could likely be included with the two step cells without much fuss, creating that saturated response. Note that fundamental harmonic is more preserved in such a response.

Using a smaller deadzone in the center could allow for a symmetric response with easier tuning and more harmonic preservation. However, this would require 9 folds: 1 in the final output to put it another way, this lowers the maximum gain where interesting things happen. For a crossover-step-limit stage, only 4 steps (8 folds) are created, rather than 5. The final output would be limited to 36dB, rather than 40dB.

Two stages were chosen in the final design. This is foremost for practical reasons: each stage requires an op-amp, and two more op-amps can be used for input VCA. Two stages were also chosen in response to the design of circuit #15, a 3-stage, 28dB waveforder. In that circuit, each stage only produces (3n−1) folds, rather than 4n or 5n, as it only uses limiting, no cross or step. The full response has a formant like behavior, caused by the gain between each stage. Two stages with more folds per stage reduces this formant like response.

Further research will focus on initial nonlinear behavior before input into waveshapers. Sinusoidal folders can implement phase modulation, and using nonlinear processes at input can create Casio style phase-distortion. Further, there are other step-responses available, with sharper/more discrete steps, creating a sawtooth rather than sinusoid response.

[1] A Diode Bridge Limiter for Use with Electronic Analogue Computers, (1951)
Aussat J. Medkeff, Robert J. Parent
AIEE Transactions, Vol 70, pp. 913–916
[2] Virtual analog models
[3] Virtual analog Model Lockhart/Gerge
[4] Virtual Analog model of buchla
[5] Saturating Waveforder, "Complex Nonlinearities", 2020 Jatin Chowdhury
[6] Extreme Wavefording, https://expertopinions.org/videos/wavefording/

VCA

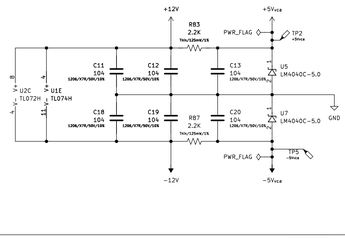

Blackmer cell, David Blackmer/dbx
Medkeff & parent for basic clipper

Stall-cell and folding behavior novel.
Values optimized through iterative spice simulation.
So obviously was tested in spice.

Blackmer cell is well established as a design and has been tested extensively.

VCF

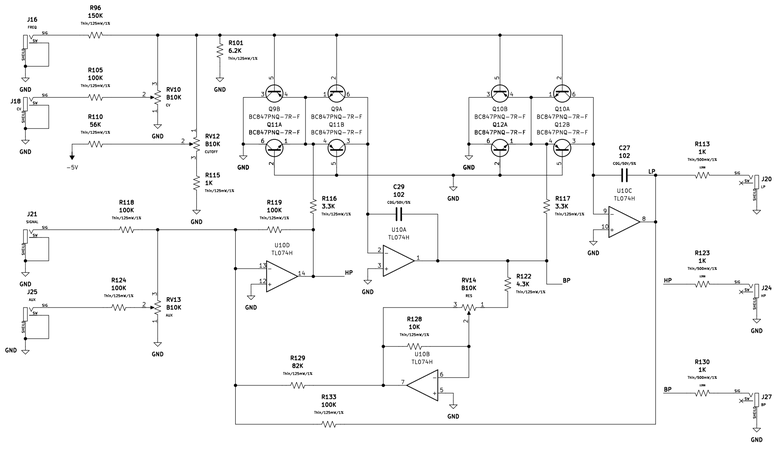

Blackmer cell, or commplementary log-antilog amplifiers.

State variable topology is common values found through numerical calculation

class-b mode is atypical, probably due to the distortion

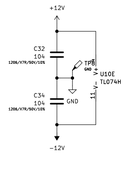

VCS

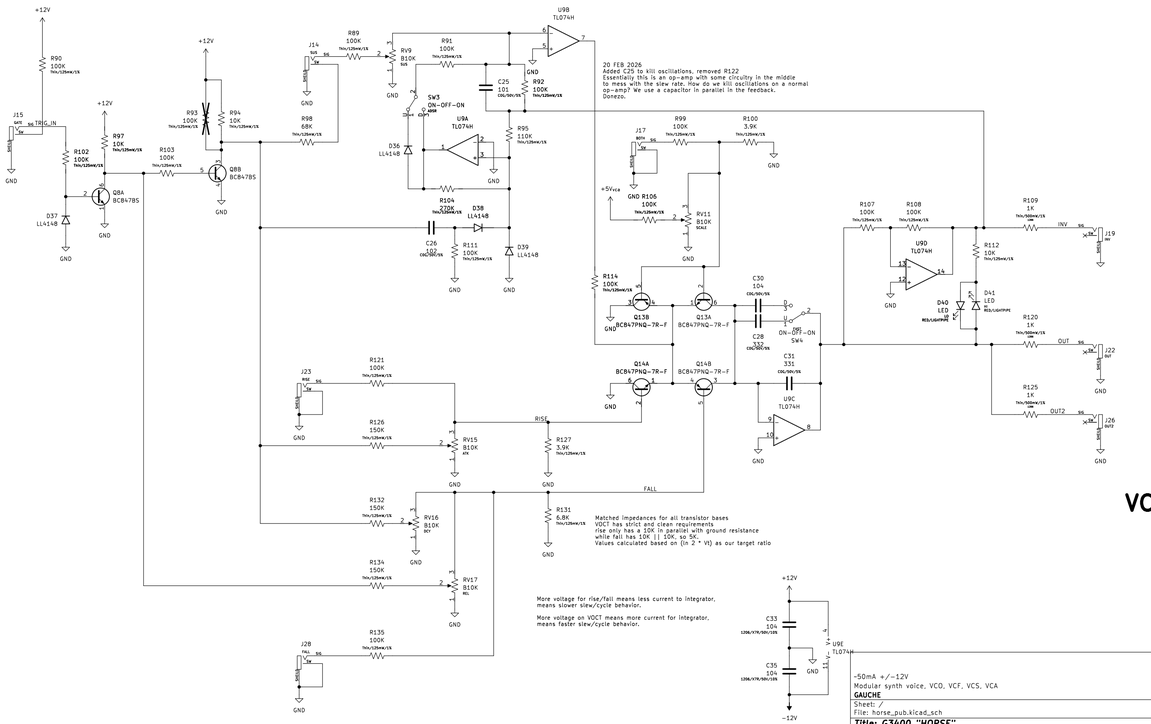

Korg PS3100 envelope
Serge Dual Slope Generator
Blackmer cell
common implementation.

ADSR state machine, biasing, and feedback network novel.
Values found via PCB protoyping.

−50mA +/−12V
Modular synth voice, VCO, VCF, VCS, VCA
GAUCHE
Sheet: /
File: horse_pub.kicad_sch

Title: G3400 "HORSE"

Size: A1	Date: 2026-02-26	Rev: 2.0
KiCad E.D.A. 8.0.9		Id: 1/1